Pomona ELECTRONICS

Technical Data Sheet

Model 73007
MCX JACK STRAIGHT PCB RECEPTACLE

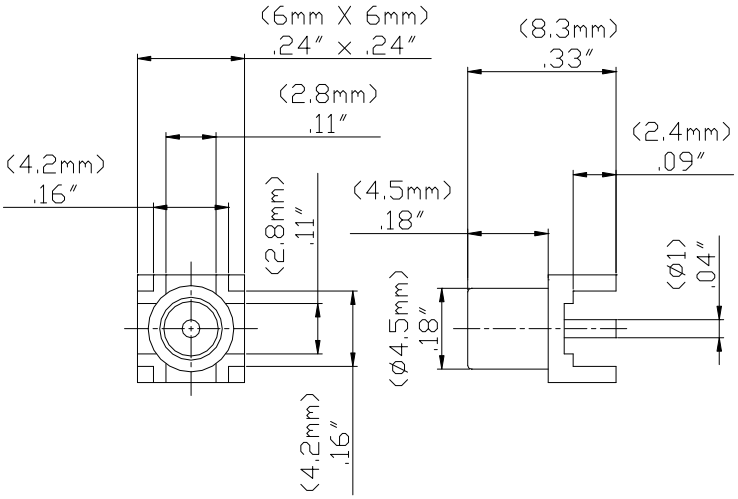

Model 73007 MCX JACK STRAIGHT PCB RECEPTACLE

Snap-on coupling and miniature size for fast connect and disconnect where space is limited.

Features

- DC - 3 GHz bandwidth.
- 30% smaller than SMB connectors.
- Meets CECC 22220.
- Perfect for applications where space, weight, performance and ease of assembly are required.
- Precision machined and gold-plated for low loss.

Materials

- Body is machined brass with gold plating.
- Center contacts – Plug is gold plated brass and Jack is gold plated beryllium copper.
- High quality PTFE insulators.
- Crimp Ferrules are gold or nickel plated copper.

Specifications

Impedance	50 Ω
Frequency Range	DC - 3 GHz
VSWR	1.35 max.
Working Voltage	170 Vrms max.
Dielectric withstand voltage	750 Vrms
Center / Outer contact resistance	5 / 2.5 mΩ
Number of insertions	500 cycles min.
Insulation resistance	1,000 MΩ min.
Temperature Range	-55˚ C to 155˚ C, -67˚ F to 311˚ F

Ordering Information

Model: 73007
Description: MCX JACK STRAIGHT PCB RECEPTACLE

USA: Sales: 800-490-2361
Technical Support: technicalsupport@pomonatest.com
Fax: 425-446-5844
Europe: 31-(0) 40 2675 150 **International**: 425-446-5500
Where to Buy: www.pomonaelectronics.com

All dimensions are in inches. Tolerances (except noted): .xx = ±.02” (.51 mm), .xxx = ± .005” (.127 mm). All specifications are to the latest revisions. Specifications are subject to change without notice. Registered trademarks are the property of their respective companies.
D2003444 REV 001

Copyright © 2007 10/17/2007